Operator's Manual

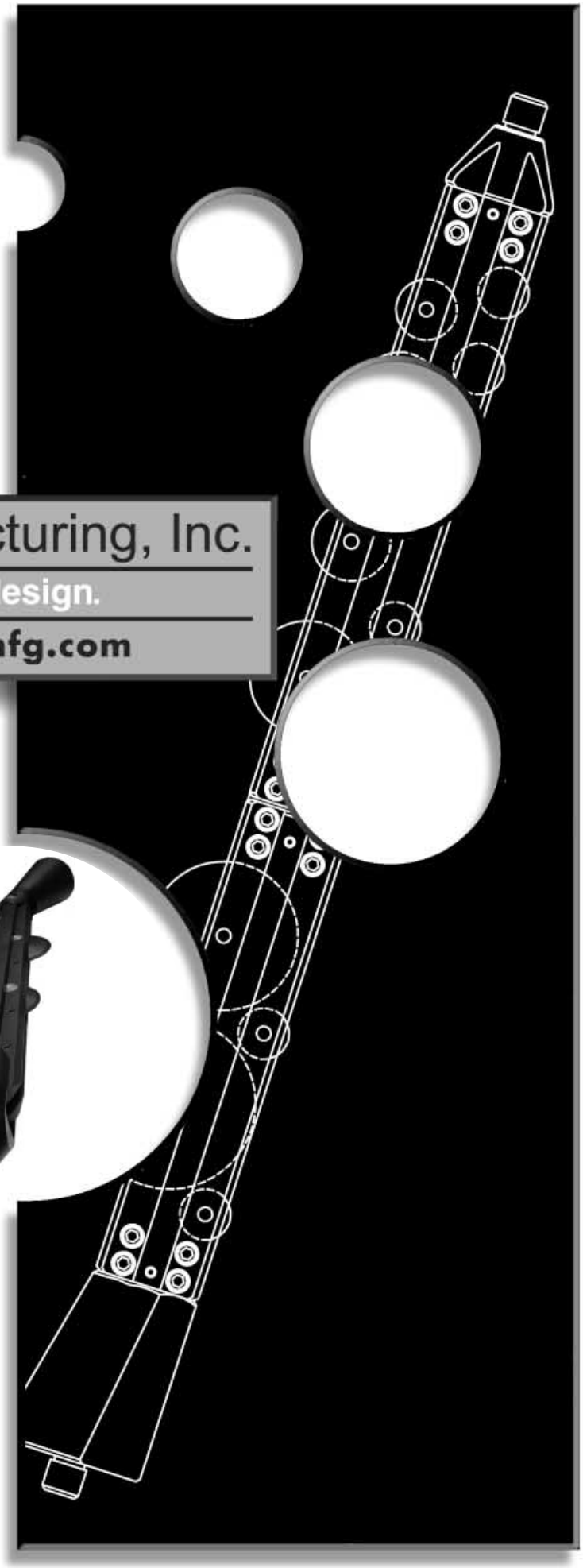

McElroy Manufacturing, Inc.

The leader by design.

www.mcelroymfg.com

THE Bullet™

Patent No. 5,098,225

Pipe Splitting Tool

1-1\2 ", 2", 3", 4", 6", 8", 10", & 12"

Manual: B001 Revision: 5/01

Introduction

Thank You for purchasing this McElroy product

The Bullet™ does away with conventional excavation for replacing mains and services, which minimizes pavement restoration and roadway disturbance.

From a sending pit, the puller rods are pushed through the existing pipeline. The Bullet™ and new polyethylene pipe are then pulled through the pipe line. This splits, expands, and replaces the pipe in a single step.

The Bullet™ can cut through pipe thicknesses up to Schedule 40. Models are available for 1 1/2" through 12". The Bullet™ cuts through compression couplings, stainless steel repair sleeves, service tees, and screw couplings without the assistance of internal or external impact tools.

Before operating this tool, please read this manual thoroughly, and keep a copy with the tool for future reference.

THE Bullet™

Patent No. 5,098,225

PH01848-7-25-00

TX00303-2-6-96

Warranty

LIMITED WARRANTY

McElroy Manufacturing, Inc. guarantees this product to the original purchaser against workmanship and material defects for **three (3) years** from date of shipment, with the exception of purchased items (such as electronic devices, pumps, switches, etc.), in which case that manufacturer's warranty applies. This warranty does not apply to any product or component which has been repaired or altered by anyone other than McElroy Manufacturing, Inc., or has become damaged due to misuse, negligence or casualty, or has not been operated or maintained according to McElroy Manufacturing, Inc.'s printed instructions and warnings.

Claims cannot be allowed until the questioned product has been received, freight prepaid, at the manufacturer's factory, with complete information and data regarding the failure. Materials returned to McElroy Manufacturing, Inc. for warranty work, repair, etc., **must have a Return Material Authorization (RMA) number**, and be so noted on the package at time of shipment. This number may be obtained by calling (918) 836-8611. If seller's review indicates that warranty applies, the defective product will be repaired or replaced and returned to purchaser F.O.B. Tulsa, Oklahoma.

McElroy Manufacturing, Inc. is not responsible or liable for loss of any sort including incidental and consequential damages.

McElroy Manufacturing, Inc. specifically disavows any other representations as to warranty or liability, related to the condition or use of the product.

For assistance, inquiries on be directed to McElroy Manufacturing, Inc., P.O. Box 580550, 833 North Fulton, Tulsa, Oklahoma 74158-0550, (918) 836-8611, Fax No. (918) 831-9285, www.mcelroymfg.com.

Register Online at www.mcelroymfg.com

DISCLAIMER OF LIABILITY

McElroy Manufacturing, Inc. accepts no responsibility of liability for fusion joints. Operation and maintenance of the product is the responsibility of others. We recommend qualified joining procedures be followed when using McElroy fusion equipment.

McELROY MAKES NO OTHER WARRANTY OF ANY KIND WHATEVER, EXPRESS OR IMPLIED; AND ALL IMPLIED WARRANTIES OF MERCHANTILABILITY AND FITNESS FOR A PARTICULAR PURPOSE WHICH EXCEED THE AFORESTATED OBLIGATION ARE HEREBY DISCLAIMED BY McELROY.

PRODUCT IMPROVEMENT

McElroy Manufacturing, Inc. reserves the right to make any changes in or improvements on its products without incurring any liability or obligation to update or change previously sold machines and/or the accessories thereto.

TERMS AND CONDITIONS

Net 30 Days - Subject to credit approval. A carrying charge of 1-1/2% per month computed from invoice date will apply to invoices not paid within 30 Day Terms.

McElroy Manufacturing, Inc. must be notified of any discrepancy in shipment, order, and/or invoice within 10 days after receipt.

Freight is F.O.B. Tulsa, Oklahoma - usually motor freight collect or UPS unless otherwise specified.

Prices are subject to change without notice.

Minimum order is $50.00.

(Copy information listed on the Warranty Card for your records).

Model No. _____

Serial No. _____

Date Received _____

Distributor _____

TX01940-5-29-01

Table of Contents

Equipment Safety

Safety Alerts 1-1
Read and Understand 1-1
General Safety 1-2
Wear Safety Equipment 1-2
Underground Hazards 1-3
Electrical Safety 1-4
Gas Pipe Line Safety 1-5

Overview

Overview of the Bullet 2-1

Operation

Read Before Operating 3-1
Puller Unit Opening 3-1
Trench Box 3-2
Extension Frame 3-2
Swing Arms 3-2
Rod Puller Unit 3-3
Service Connection Openings 3-3
Insertion Opening 3-4
Prepare Plastic Pipe 3-4
Puller Rods 3-5
Attach Guide Nose 3-5
Insert Puller Rods into Pipe Line 3-5
Remove Guide Nose 3-6
Lubricate Moving Parts 3-6
Attach Bullet™ to Puller Rods 3-6
Attach Plastic Pipe to Splitter 3-7
Insert the Bullet™ 3-8
Protect Plastic Pipe 3-8
Split and Expand Pipe 3-9
Clean Puller Rods 3-9
Service Openings 3-9
Removing the Bullet™ 3-10
Remove Equipment 3-10
Make New Connections 3-10
Maintenance 3-11

COPYRIGHT © 2001

McELROY MANUFACTURING, INC.

Tulsa, Oklahoma, USA

All rights reserved

All product names or trademarks are property of their respective owners. All information, illustrations and specifications in this manual are based on the latest information available at the time of publication. The right is reserved to make changes at any time without notice.

TX01941-5-30-01

Table of Contents

Modifying Cutters

Modifying a 2″ Cutter 4-1
Modifying 3″ and 4″ Cutters 4-2

Specifications

Puller Specifications 5-1

Fusion Equipment Safety

Safety Alerts

This hazard alert sign appears in this manual. When you see this sign, carefully read what it says. YOUR SAFETY IS AT STAKE.

You will see the hazard alert sign with these words: DANGER, WARNING, and CAUTION.

WR00051-11-30-92

DANGER Indicates an imminently hazardous situation which, if not avoided, will result in death or serious injury.

WARNING Indicates a potentially hazardous situation which, if not avoided, could result in death or serious injury.

CAUTION Indicates a hazardous situation which, if not avoided, may result in minor or moderate injury.

In this manual you should look for two other words: **NOTICE** and **IMPORTANT**.

NOTICE: can keep you from doing something that might damage the machine or someone's property. It may also be used to alert against unsafe practices.

IMPORTANT: can help you do a better job or make your job easier in some way.

TX00030-12-1-92

Read and Understand

Do not operate this equipment until you have carefully read, and understand the "Safety" and "Operation" sections of this manual, and all other equipment manuals that will be used with it.

Your safety and the safety of others depends upon care and judgment in the operation of this equipment.

Follow all applicable federal, state, local, and industry specific regulations.

McElroy Manufacturing, Inc. cannot anticipate every possible circumstance that might involve a potential hazard. The warnings in this manual and on the machine are therefore not all inclusive. You must satisfy yourself that a procedure, tool, work method, or operating technique is safe for you and others. You should also ensure that the machine will not be damaged or made unsafe by the method of operation or maintenance you choose.

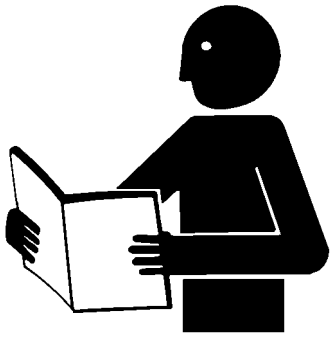

WR00052-12-1-92

TX00031-12-8-92

Fusion Equipment Safety

General Safety

Safety is important. Report anything unusual that you notice during set up or operation.

LISTEN for thumps, bumps, rattles, squeals, air leaks, or unusual sounds.

SMELL odors like burning insulation, hot metal, burning rubber, hot oil, or natural gas.

FEEL any changes in the way the equipment operates.

SEE problems with wiring and cables, hydraulic connections, or other equipment.

REPORT anything you see, feel, smell, or hear that is different from what you expect, or that you think may be unsafe.

SAFE1ST-12-22-92

TX00114-4-22-93

Wear Safety Equipment

Wear a hard hat, safety shoes, safety glasses, and other applicable personal protective equipment.

Remove jewelry and rings, and do not wear loose-fitting clothing or long hair that could catch on controls or moving machinery.

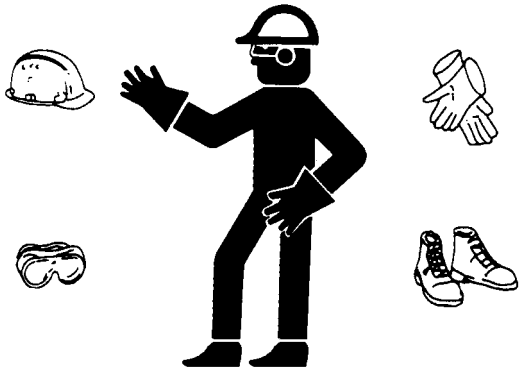

WR00053-12-2-92

TX00032-4-7-93

Underground Hazards

DANGER Underground Hazards. Striking buried utilities can cause explosion, death, or serious injury. Classify jobsite hazards and use correct equipment and work methods.

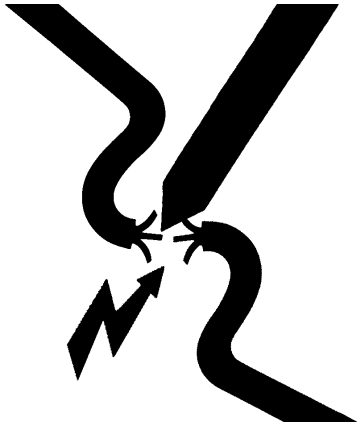

WR00056-12-3-92

Before excavating contact the local One Call service to request location of utilities and other types of underground hazards.

Verify that all owners of buried utilities and other underground hazards belong to this One Call service. If not, or if One Call is not available, individually notify all organizations that may have buried hazards in the area.

Conduct a personal inspection of the jobsite that includes the perimeter along side streets, roads, and fences. Look for buried utility notices, facilities without overhead lines (indicating buried services), gas or water meters, pad mounted transformers, junction boxes, drop boxes, light poles, manhole covers, sunken ground or any other irregularity that may indicate previous trenching.

Check that utilities marked by another organization look reasonable and that none appear to be overlooked. If you have your own locating equipment, spot check the locations flagged by others until you are satisfied. When in doubt, hand excavate to verify what is really there.

Some of the possible underground hazards include: electrical cables, natural gas lines, pipe lines carrying other chemicals, storage tanks, sewer lines, water lines, and fiber optic cables.

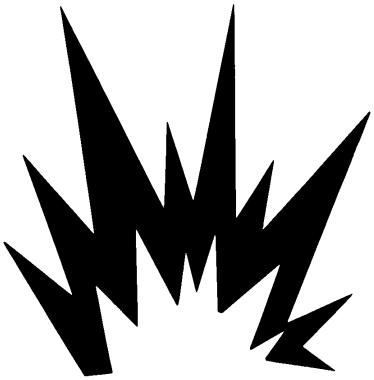

WR00027-12-3-92

TX00027-12-8-92

Underground Safety

DANGER Cave-in possible. Cave-in may cause suffocation or injury. Read, understand, and follow U.S. Department of Labor regulations on excavating and trenching, part 1926, subpart P.

WR00085-7-8-93

TX00044-12-10-92

Electrical Safety

DANGER Electrocution Hazard. Operator could be electrocuted if a buried power line is struck during cutting/expansion. Use proper safety equipment.

DANGER Electrocution hazard. Bystanders could be electrocuted if they touch equipment during cutting/expanding. Set up warning barriers and keep other persons away from equipment and jobsite.

WR00055-12-3-92

Accidentally striking a buried power line is one of the greatest dangers in all underground work. As with all accidents the best protection is prevention.

An electrical strike could occur while excavating or if The Bullet¿ cutters contact a buried power line.

The site must be classified as an electrical site if the cutting/expansion is to be done within 10 feet of a buried electrical cable, or if there is any doubt.

If a site is classified as an electrical one, appropriate precautions and protective equipment must be used.

Wear 20,000 Volt (minimum) linemen's boots and gloves specifically made for electrical insulation.

Additional safety equipment is available. Appropriate equipment could include: a strike sensing system, grid system (trench box and/or grounding mats), bonding cables and hardware, and a grounding rod. This equipment should be used per your company's procedure, and in accordance with federal, state, local, and utility regulations.

WR00071-12-6-92

Set up warning barriers and keep other persons away from equipment and jobsite.

Consult local utilities for procedure to follow in the event of a strike.

Have a plan to follow, and inform all workers of what they should do in the event of a strike.

An electrical strike is dangerous and can kill. However, with proper equipment, preparation, and worker knowledge the risk of personal injury can be greatly reduced.

TX00033-12-8-92

WR00059-12-4-92

Gas Pipe Line Safety

DANGER Explosion Hazard. Gas can ignite causing explosion, death, or serious injury. Use gas utility procedures for removing gas line from service.

WR00034-11-30-92

A gas strike could occur while excavating, or if The Bullet™ cutters contact a buried gas line.

If a gas line is being cut/expanded, the residual gas from the line is also a hazard.

Contact local gas utility for procedures to follow in the event of a strike. Any procedures used must comply with federal, state, local, and utility regulations

Have a plan to follow, and inform all workers of what they should do in the event of a strike.

TX00034-1-18-93

Puller Rods can Break and Eject

WARNING Puller rods under force can break and eject. Puller rods store energy, and may eject with force sufficient to impale operators. Never stand, or place any body part in the path of the puller rods.

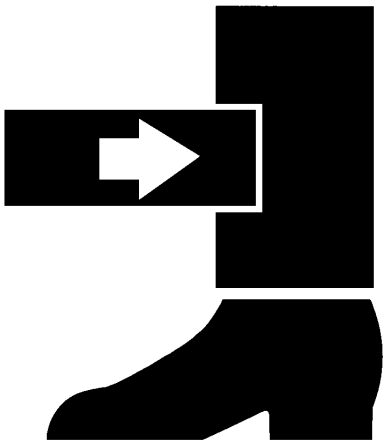

WR00084-6-21-93

TX00302-7-9-93

Overview of Operation

Excavated holes are required for the rod pusher unit, plastic pipe insertion opening, and at all service connections along the pipe being split.

The pipeline is removed from service and puller rods are pushed into the pipeline.

The Bullet™ along with the new plastic pipe are then pulled through the existing pipeline. This splits, expands and inserts the new pipe in a single step.

Trench Box Only

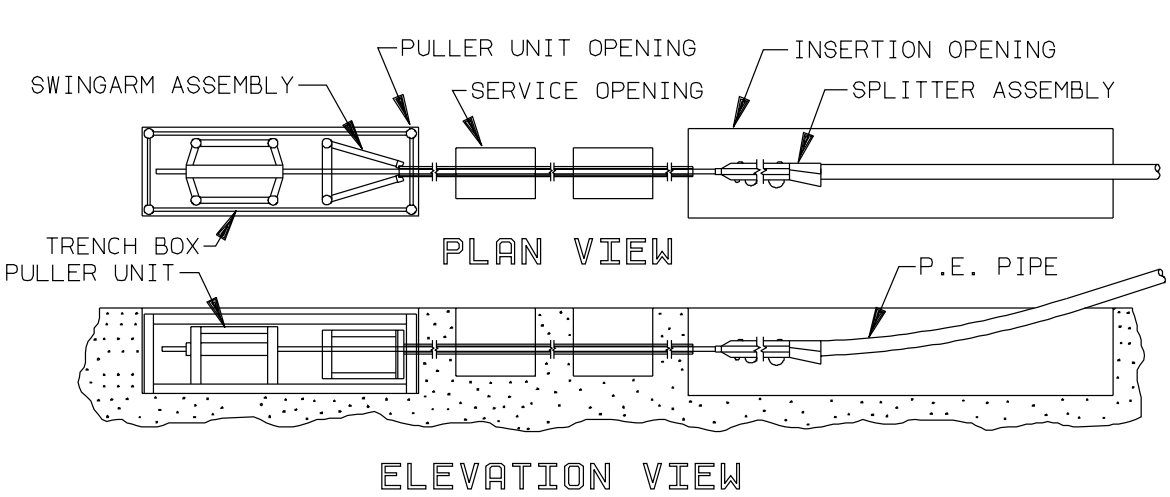

PH00363B-1-4-96

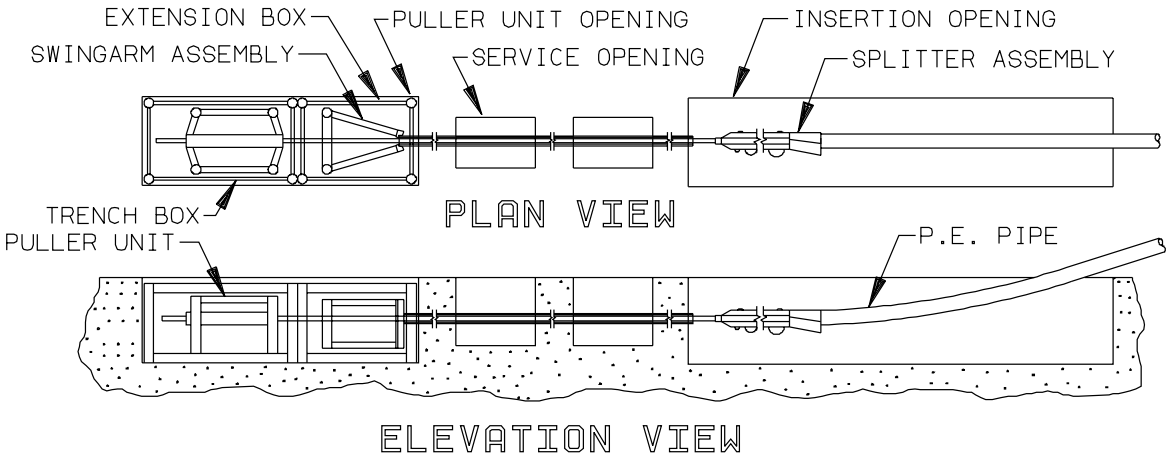

TX00423-8-11-94

Read before Operating

Before operating this machine, please read this manual thoroughly and keep a copy with the machine for future reference.

PH01054-2-20-97

TX00838-1-5-96

Puller Unit Opening

Remove the line to be rehabilitated from service. Open a hole using appropriate dimensions for the puller unit being used.

PH00001-11-19-92

Cut the section of pipe that is being replaced so that approximately six inches protrude into the hole.

PH00008-11-30-92

Install a 3/4" plywood base in the bottom of the hole. Cover plywood with a neoprene pad to form a floor on which to work.

The trench box and rod puller must be installed at the correct depth and angle to match the pipe being split.

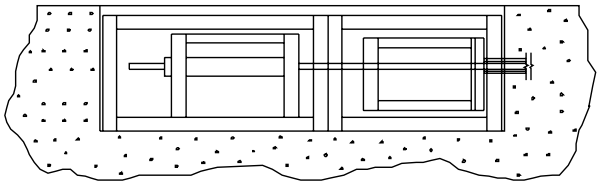

CD00134C-8-3-94

TX00305-9-15-94

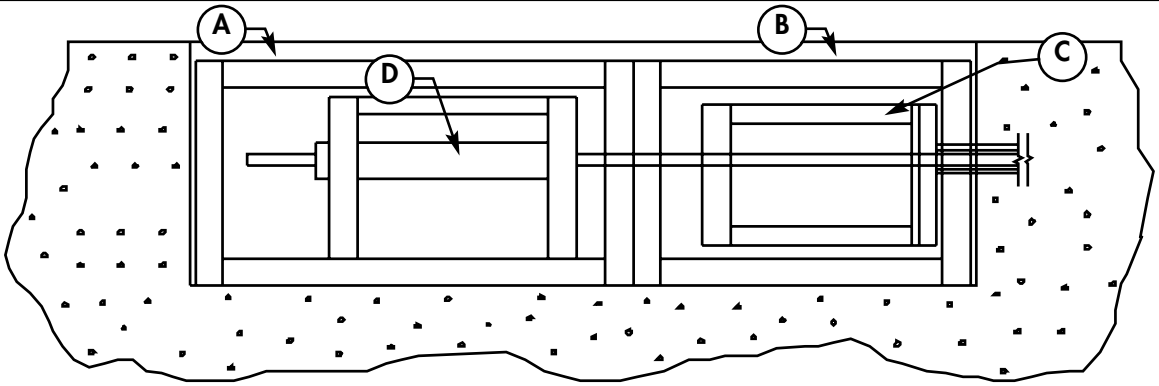

CD00134C-8-3-94

Trench Box (A)

Install the trench box supplied by the rod puller manufacturer as required. Additional bracing and wedging will be needed to secure the puller in place.

IMPORTANT: Because of the forces involved in splitting and expanding pipe, the trench box must be solidly braced in the hole using timbers.

Refer to the puller manufacturer's installation recommendations.

TX00306-7-29-93

PH01883-7-25-00

Extension Box (B)

Some manufacturer's trench boxes (A) are long enough and modified to accept the swing arms (C) to be installed directly. On trench boxes which are not long enough, the swing arms are installed in an extension box (B) (see Appendix A). Additional bracing and wedging will be needed to secure the puller in place.

IMPORTANT: Because of the forces involved in splitting and expanding pipe, the trench box must be solidly braced in the hole using timbers.

TX00306-9-15-94

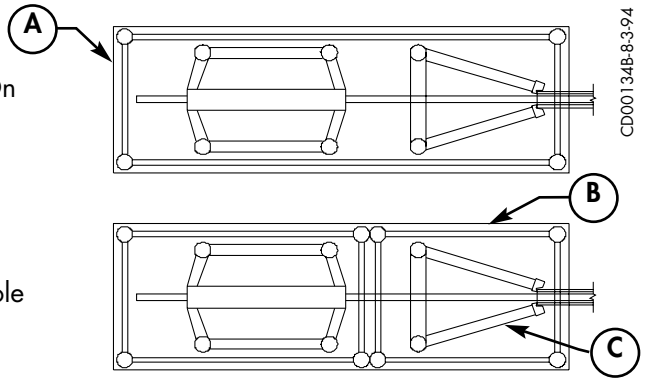

CD00134B-8-3-94

Swing Arms (C)

The swing arms oppose the pulling force and help retain the pipe in the ground. Install the swing arms in extension box (or trench box). The swing arm flanges should butt against the cut end of the pipe.

When The Bullet™ reaches the swing arms, the arms pivot out, but still remain in contact with the pipe end until the pull is completed.

TX00330-9-15-94

PH00704-2-5-96

Rod Puller Unit (D)

Install the rod puller unit per the manufacturer's recommendations.

The trench box and rod puller must be installed at the correct depth and angle to match the pipe being split.

PH01870-7-25-00

TX00307-8-4-94

Service Connection Openings

Each service connection along the pipe line needs to be excavated so that existing service connections can be attached to the new plastic pipe.

PH001869-7-25-00

Cut the service line, leaving enough line to reconnect services after the new plastic pipe is in place.

Dimensions shown are approximate, and should be used for reference only.

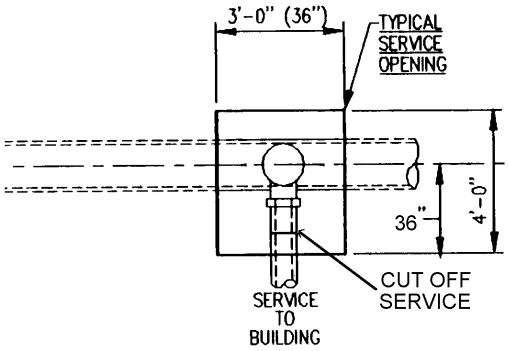

TOP VIEW

PH00033-11-23-92

Use the **modified** cutter to score the old pipe on each side of the service connection as shown in the drawing. Score the pipe by using the modified cutter and moving back and forth 45° from vertical. This will allow the bottom cutters to fully cut the pipe while the top cutters penetrate 90% of the pipe wall. Do not remove this section until the new plastic pipe is pulled through.

This pipe is scored and left in place so that the pipe doesn't shift from the forces involved in the cutting/expanding.

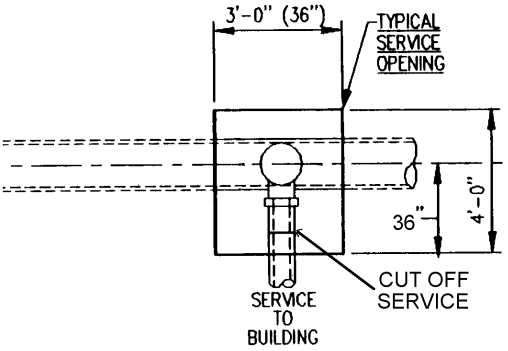

TOP VIEW

PH00022-12-1-92

TX00308-8-5-94

Insertion Opening

This hole is where The Bullet™ tool is attached to the puller rods, and the new plastic pipe is inserted.

Excavate a large enough hole to give convenient access

.The Bullet™ and new plastic pipe must enter the pipe line in the same plane (their direction and angle match the pipe line's).

The hole must be long enough so the plastic pipe easily enters the steel pipe without excessively bending the plastic pipe.

Use an unmodified cutter to cut the steel pipe at the plastic pipe insertion point.

Remove enough steel pipe so that the plastic pipe easily enters the steel pipe without excessively bending the plastic pipe.

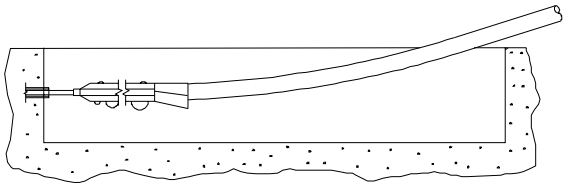

CD00134A-8-3-94

PH00008-11-19-92

TX00309-9-15-94

Set up Pipe Support (Coiled Pipe)

Set up the new plastic pipe on a stand or trailer near the plastic pipe insertion opening.

Conduct any pre-insertion pressure tests on the plastic pipe that are required.

PH00006-11-19-92

TX00310-9-15-94

Set up Fusion Equipment (Straight Lengths of pipe)

When using straight lengths of pipe, the individual pieces must be fused into a single length of pipe.

Follow your organization's procedure to fuse a length of pipe sufficient for the pull.

IMPORTANT: Fusing pipe while the holes are being excavated minimizes the time required to complete a pull.

PH00343-8-4-94

TX00325-8-15-94

Puller Rods

Based on the length of the pipe to be cut/expanded, select the number of puller rods required for the job.

IMPORTANT: Puller rods need to be straight, and the threads must be in good condition. Place these rods in a clean area next to the puller opening.

IMPORTANT: Count and keep track of how many rods are used. If the tool becomes stuck, this will allow you to determine where to excavate to recover the tool.

TX00311-7-13-93

PH00706-2-6-96

Attach Guide Nose

The guide nose is attached to the first puller rod to support and protect the rods when they are pushed through the existing pipe line. The 2" guide nose (B) resizes any reduced diameter welds to allow the splitter to pass through.

(A) Guide nose for 3", 4", and 6" sizes

(B) Guide nose for 1-1\2" & 2" sizes

PH00341-8-4-94

TX00331-8-4-94

Insert Puller Rods Into Pipe Line

Follow rod puller manufacturer's instructions and procedure to hook up the hydraulic power supply to the puller unit.

Continue to add puller rods and insert them with the puller until the guide nose reaches the insertion opening.

WARNING Puller rods under load can spring back and crush hands or feet. Keep clear of the rod path during pushing and pulling operations.

WARNING Do not clamp directly on the couplings between the rods during the pushing or pulling operations. This could damage or destroy the coupling.

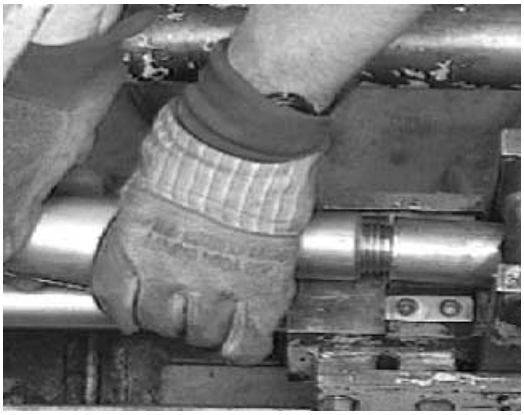

PH00005-11-19-92

TX00313-7-11-93

Remove Guide Nose

When the guide nose has been pushed through far enough that The Bullet™ can be attached, stop the pushing operation.

Remove the guide nose from the end of the puller rod.

Use a spray lubricant to lubricate and clean the guide nose rollers and pins.

PH00195-7-29-93

TX00332-7-28-93

Lubricate Moving Parts

Use a spray lubricant to lubricate the Cutter Wheels (A), Roller Pins (B), and Guide Rollers (C).

Lubricating these moving parts before each pull helps to reduce friction, keep the parts clean, reduces binding, and lengthens the life of these components.

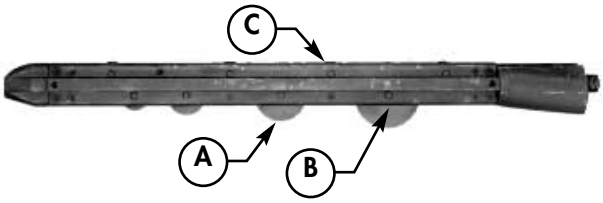

PH00199-7-29-93

TX00326-11-2-93

Attach Bullet™ to Puller Rods

Consult Appendix A-1 for a listing of adapters required for various manufacturer's puller rods.

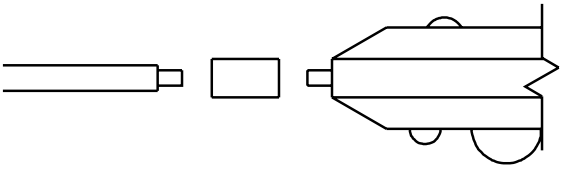

CD00135-10-13-94

TX00333-10-13-94

Attach Plastic Pipe to Splitter

Position the drill template on the end of the pipe and drill four 3/8" holes in the new plastic pipe.

CD00142-11-2-94

Attach the pipe to the expander with two 3/8" bolts and nuts; use washers on each end.

2" pipe requires two 3" long bolts

3" pipe requires two 4" long bolts

4" pipe requires two 5" long bolts

CD00178-5-3-96

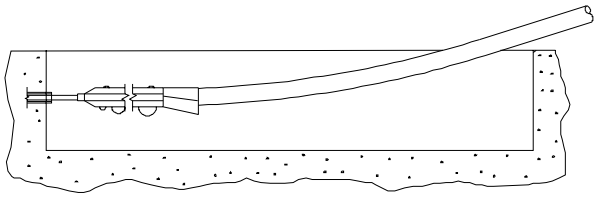

PH01865-7-25-00

TX00317-10-13-94

Insert The Bullet™

Insert The Bullet™ body into the main so that the large cutting wheels (A) are at a 5 or 7 o'clock position.

PH00015-11-19-92

NOTICE: The 5 or 7 o'clock position reduces the chances of striking another utility buried directly above, below, or alongside the pipe being cut/expanded.

This will also reduce the cave-in of dirt into the pipe that is being cut/expanded.

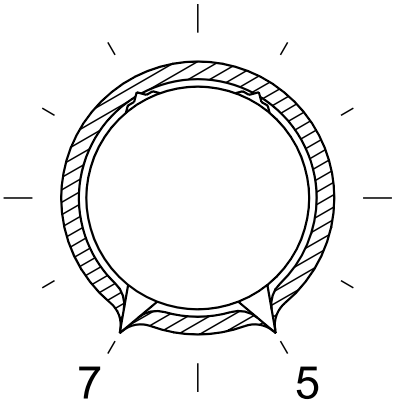

CD00136-8-5-94

TX00312-7-28-93

Protect Plastic Pipe

Install plastic guard at the entrance of the main to prevent scraping the plastic pipe when it is pulled through the main.

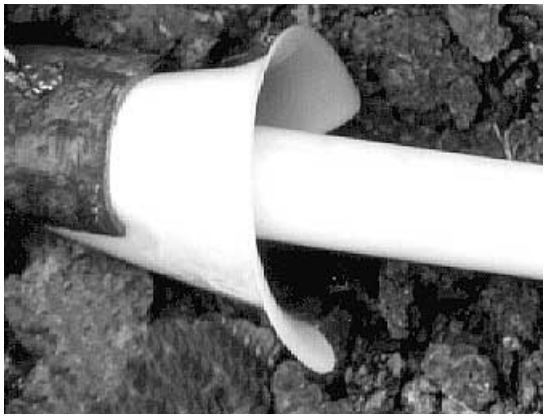

PH00344-8-9-94

TX00318-8-5-94

Split and Expand Pipe

Follow rod puller manufacturer's procedure to pull The Bullet™ through the pipe line.

Continue to remove puller rods as they are pulled until the splitter body reaches the extension box in the insertion opening.

WARNING Puller rods under load can spring back and crush hands or feet. Keep clear of the rod path during pushing and pulling operations.

WARNING Do not clamp directly on the couplings between the rods during the pushing or pulling operations. This could damage or destroy the coupling.

IMPORTANT: Count and keep track of how many rods are removed. If the tool becomes stuck, this will allow you to determine where to excavate to recover the tool.

TX00335-8-15-94

PH00345-8-5-94

PH00707-2-6-96

Clean Puller Rods

As the rods are disconnected from the pusher unit they should be wiped down, and the threads wire brushed and lubricated before stacking.

TX00319-7-29-93

PH00019-12-23-92

Service Openings

After the Puller Cone clears a service hole, peel back the scored section of pipe and remove the old service.

Add plastic guards at the pipe edges to protect the plastic pipe as it's pulled through.

TX00320-8-5-94

PH00042-11-23-92

Removing the Bullet™

Continue splitting and expanding until the Bullet™ reaches the puller unit opening.

Detach the Bullet™ from the plastic pipe.

With the tool's weight properly supported, unthread the Bullet™ from the puller rods.

TX00420-8-5-94

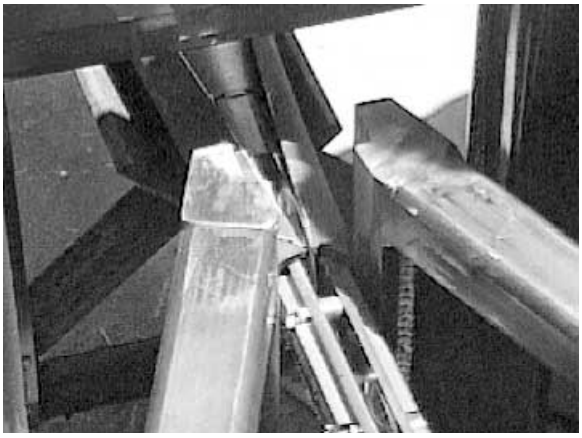

PH000340-10-18-94

Remove Equipment

Remove the puller unit, trench box, extension frame, neoprene pad and plywood floor from the hole.

TX00322-7-12-93

PH00703-2-5-96

Make New Connections

Make new connections to the plastic pipe and all service connections using standard utility company procedures.

TX00323-7-12-93

PH000342C-8-4-94

Maintenance

It is important to perform some simple maintenance after each use to prolong tool life, and insure proper operation.

Wipe the tool down with a clean rag.

Blow away any dirt around the Cutting Wheels, Guide Rollers, and Roller Pins.

Lubricate Cutting Wheels, Guide Rollers, and Roller Pins with a spray lubricant.

PH00089-1-19-93

Inspect The Bullet™ after each use for signs of wear or damage. Replace any parts that have become worn or damaged before using the tool again.

For the tool to operate correctly it is particularly important to replace chipped or dull Cutting Wheels.

PH00076-12-22-92

TX00324-9-15-94

Modifying a 2" Cutter

The Bullet™ accessory kit is shipped with a cutter that has been modified. These instructions are provided for repair or replacement purposes. When using The Bullet™ to cut/expand pipe, some of the cuts to the steel pipe go through only 90% of the pipe. These scored sections are not removed until the new plastic pipe is in place. They are left in place so that the pipe doesn't shift from the forces involved in the cutting and expanding.

To accomplish this scoring, a 2" pipe cutter Reed model # 2-4-WG {Part # MMD00059) is modified by installing spacers (Part # B2-801) on two cutting wheels.

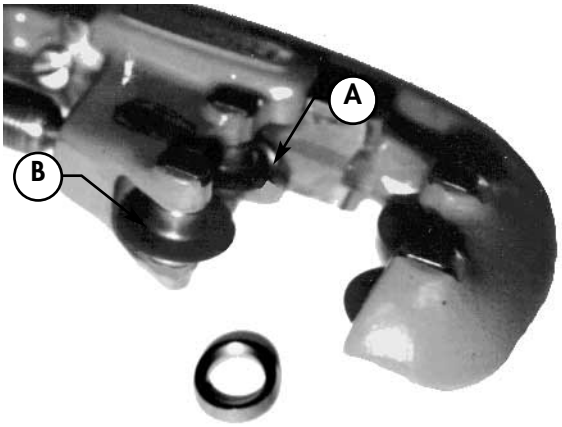

PH00087-12-15-92

Remove the top two cutting wheels (A & B) from the pipe cutter.

Install spacer bushings on each side of the cutting wheels.

The smaller side of the tapered bushing should be against the cutter blade.

PH00074-12-15-92

Reattach the cutting wheels to the tool with the spacer bushings installed on the cutting wheels.

The tool is now ready to score pipe.

PH00057-12-15-92

TX00007-9-15-94

Modifying 3" & 4" Cutters

The Bullet™ accessory kit is shipped with a cutter that has been modified. These instructions are provided for repair or replacement purposes. When using The Bullet™ to cut/expand pipe, some of the cuts to the steel pipe go through only 90% of the pipe. These scored sections are not removed until the new plastic pipe is in place. They are left in place so that the pipe doesn't shift from the forces involved in the cutting and expanding.

PH00201-8-19-93

To accomplish this scoring, a 4" pipe cutter Reed model # H4S (Part # MMD00061) is modified by installing spacers on two of the cutting wheels. Select the spacer that is appropriate for the the size pipe to be scored.

Spacer Part # B3-801 is for 3" pipe

Spacer Part # B4-801 is for 4" pipe

Remove the top two cutting wheels (A & B) from the pipe cutter.

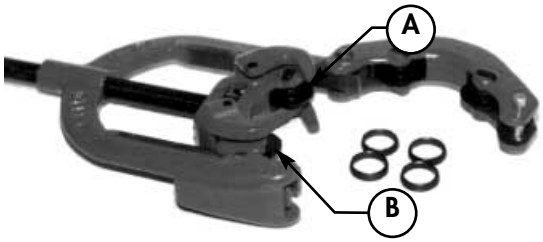

PH00205-8-19-93

Install spacer bushings on each side of the cutting wheels.

The smaller side of the tapered bushing should be against the cutter blade.

Reattach the cutting wheels to the tool with the spacer bushings installed on the cutting wheels.

The tool is now ready to score pipe.

PH00074-12-15-92

TX00339-9-15-94

Specifications

Bullet™ Specifications

Size	Approx. Length	Approx Weight	Attachment Thread Size
1-1/2"	32"	23 lbs.	1-5/16 - 6 ACME - 2G
2"	36"	28 lbs.	1-5/16 - 6 ACME - 2G
3"	50"	85 lbs.	1-5/16 - 6 ACME - 2G
4"	60"	160 lbs.	1-5/16 - 6 ACME - 2G
6"	61"	300 lbs.	2" - 6 ACME - 2G
8"	59"	410 lbs.	2" - 6 ACME - 2G
10"	57"	600 lbs.	2" - 6 ACME - 2G
12"	57"	760 lbs.	2" - 6 ACME - 2G

Rod Puller Recommendations

Size	Min. Pull (Suggested)	Max. Pull (Suggested)
1-1/2"	20,000 lbs.	40,000 lbs.
2"	20,000 lbs.	65,000 lbs.
3"	40,000 lbs.	80,000 lbs.
4"	60,000 lbs.	80,000 lbs.
6"	100,000 lbs.	150,000 lbs.
8"	100,000 lbs.	150,000 lbs.
10"	100,000 lbs.	150,000 lbs.
12"	100,000 lbs.	150,000 lbs.

TX01948-6-20-01

About this manual . . .

McElroy Manufacturing continually strives to give customers the best quality products available. This manual is printed with materials made for durable applications and harsh environments.

This manual is waterproof, tear resistant, grease resistant, abrasion resistant and the bonding quality of the printing ensures a readable, durable product.

The material does not contain any cellulose based materials and does not contribute to the harvesting of our forests, or ozone-depleting constituents. This manual can be safely disposed of in a landfill and will not leach into ground water.

TX001660-8-19-99

McElroy Manufacturing, Inc.

The leader by design

P.O.Box 580550 ▪ Tulsa, Oklahoma 74158-0550
(918) 836-8611 ▪ Fax: (918) 831-9285
www.mcelroymfg.com